yamada

Lubrication Equipment

www.yamadacorp.co.jp/global

About YAMADA• • •

The Yamada Corporation has been a leading producer of industrial equipment since 1905, and of fluid handling products for over 60 years. As a leader in pneumatic pumping technology, Yamada is known in many industries worldwide for its innovative products, superior quality, and unmatched reliability. Other companies may claim to be innovators, but an impressive history of delivering new products and solving customer problems confirms Yamada's position as the industry leader.

Yamada's reputation for manufacturing top quality products, allied with continuing efforts in research and development have created a strong foundation for market leadership. As an ISO 9001 certified corporation, stringent quality procedures are followed throughout the manufacturing process, including liquid testing of every pump prior to shipping.

The Yamada Corporation is headquartered in **Tokyo** with manufacturing facilities located throughout Japan. Satellite facilities are located in **Arlington Heights, Illinois, USA,** servicing the Western Hemisphere, **The Netherlands,** providing support throughout Europe, Africa, and the Middle East, and **Shanghai,** covering the emerging markets of China. These offices are support centers for over 300 authorized fully stocking Yamada distributors worldwide.

Yamada professional staff provides:

- Customer Service
- Product Training
- Research & Development
- Parts and Service for all Yamada® Pumps
- Application Engineering
- Industry Knowledge

With over 300 distributors, Yamada is effectively positioned to service your market needs. Contact Yamada for the location of your closest local stocking distributor.

For additional information, AutoCAD® drawings, product literature, and promotions, please visit yamadacorp.co.jp/global or contact our Sales Staff at Phone No.+81-(0)3-3777-0241.

CONTENTS

Hand Grease Guns 1
Electric Driven/Air Operated Grease Guns 2
Extensions 3
Bellows Cartridge Greases 4
Hand-Operated Oil Pumps 5
Hand-Operated Oil Pumps 6
Hand-Operated Grease Pumps 7
Air-Operated Oil Lubricators 8
Air-Operated Grease Lubricators 9
Electric Driven Grease Lubricators 10
Air-Operated Oil Transfer Pumps 11
Air-Operated Oil Transfer Pumps 12
Air-Operated Grease Transfer Pumps 13
Compact Reel YR Series 14
Hose Reel HR Series 15
Control Valves 16

Pump Selection Guide

Pump Ratio

The pump ratio is the ratio between the effective areas of the air motor (A) and of the lower pump (B). Where the area (B) is usually indicated as the base (i.e., as 1). For example when A is 100cm2 and B is 20cm2 the pump ratio would be 100:20 or 5 times 1, (=5:1). This ratio is one of the most important factors determining pump characteristics.
The maximum (theoretical) outlet discharge pressure can be calculated by multiplying the pump ratio by the supplied air pressure. For example if the above pump with a 5:1 ratio is used with an air supply of 0.7 MPa, then the maximum discharge pressure would be 3.5MPa, (=. 7 times 5). By using pumps with different pump ratios even with the same inlet air pressure it is possible to achieve low to extremely high discharge pressure.
The Yamada line up of Air Powered ™ Pumps covers all ranges of pump ratio from a 1:1 to 60:1. Therefore from the same 0.7MPa air supply, it's possible to achieve up to 42MPa of outlet pressure. In general the pump required often depends on the viscosity of the material. To pump very high viscosity materials, a pump with a high pump ratio is required.

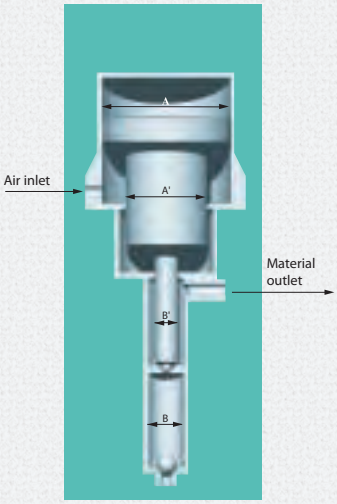

REMARKS

POWER SOURCES

- Compressed Air
- Manual
- AC 100V
- AC 240V
- DC 24V or Other Battery

SUITABLE MATERIAL FOR USE

- Oil
- NLGI No.0 Grease
- NLGI No.1 Grease
- NLGI No.2 Grease
- Water or Hot Water

SUITABLE CONTAINER

- 18L(16kg) Pail
- 200L(180kg) Drum

METHODS OF LOADING

- Direct-filling
- 420mL Bellows Cartridge
- 210mL Bellows Cartridge
- 85mL Bellows Cartridge
- 400g DIN1284 Cartridge

Pump Selection Guide

Standards of Grease

Spray *Manual/Pump* *Air/Pump* *Pressure supply pump*

Consistency of Grease

NLGI No.	JIS No.	ASTM Consistency (25℃ and 60W)	Appearance	Supplying method			
№ 000	000	445～475	Semi-fluid				
№ 00	00	400～430	〃				
№ 0	0	355～385	Semi-fluid or Soft				
№ 1	1	310～340	Soft				
№ 2	2	265～295	Standard				
№ 3	3	220～250	Standard				
№ 4	4	175～205	Semi-firm				
№ 5	5	130～160	firm	Please Consult Yamada.			
№ 6	6	85～115	Solid				

Standard Size of Containers

18kg Pail

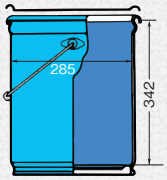

Open Head Straight Pail

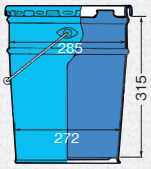

Open Head Taperd Pail

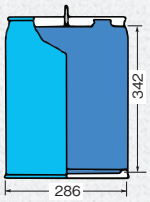

Tight Head Pail

55kg Drum

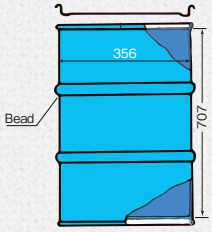

Open Head Drum

180kg Drum

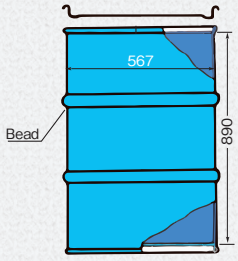

Open Head Drum

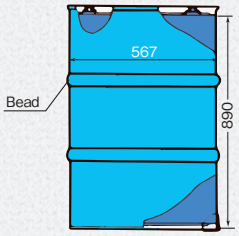

Tight Head Drum

Pump Selection Guide

Viscosity

Oil Grade Systems

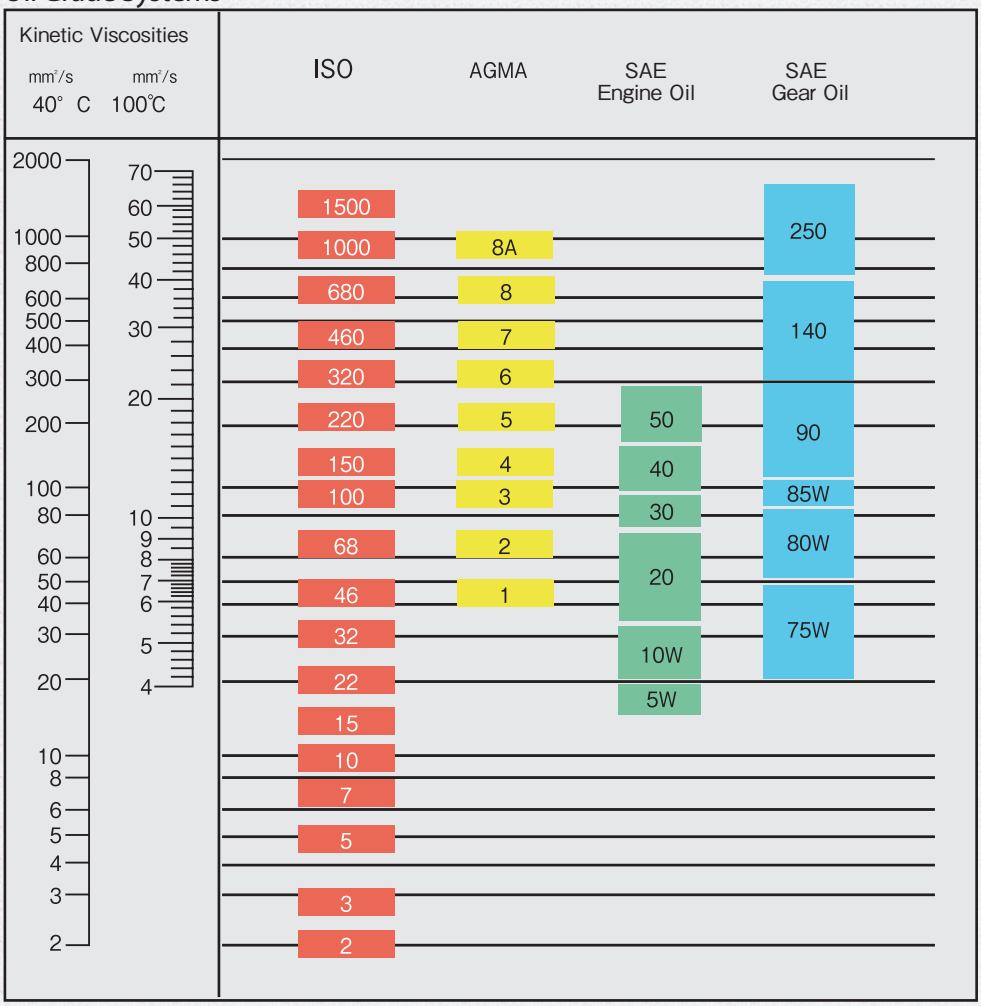

Reference

Material	Viscosity at 20℃ (CPS)	Material	Viscosity at 20℃ (CPS)
Water	1	Gear oil	2200～30000
Turpentine	1	Syrup (Thin)	2500
Sulfuric acid	2	Syrup (Thick)	3200
Milk	3	Maximum viscosity of self-suction limit	
Light oil, Kerosene	4	Grease (#0)	20000※
Ethylene glycol	16	Grease (#1)	30000※
Crude oil	28	Mayonnaise	60000
Boiled oil	64	Vaseline	64000
Motor oil SAE20	125	Grease (#2)	70000※
Motor oil SAE30	200	Mustard	70000
Castor oil	240	Grease (#3)	100000※
Motor oil SAE40	319	Tomato paste	190000
Gear oil 80	240～1900	Peanut butter	250000
Gear oil 90	590～5100		

※This number is apparent viscosity.

Grease Guns

Hand Grease Guns

YAMADA is offering high quality, high performance and durable hand grease guns.
Select the best model for your needs depending on size, capacity, grease loading method, etc.
All grease guns are equipped with straight steel extension or 3-jaw steel extension as standard.

854655 KH-16

- Compact size pistol type grease gun with 3-jaw steel extension (CNP-2)
- Barrel with lipped follower for use with 140mL direct-filling or 85mL Bellows Cartridge

854629 KH-120

- Compact size light-weight grease gun with straight steel extension
- Barrel with lipped follower for use with 140mL direct-filling or 85mL Bellows Cartridge

854628 KH-32

- Small size grease gun with straight steel extension
- Barrel with lipped follower for use with 200mL direct-filling

854627 KH-35

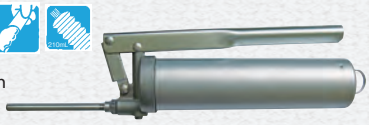

- Medium size hand grease gun with straight steel extension
- Barrel with lipped follower for use with 400mL direct-filling or 210mL Bellows Cartridge

854626 CH-400

- Standard size grease gun with straight steel extension
- Barrel with non-lipped follower for use with 420mL Bellows Cartridge

854669 KH-500

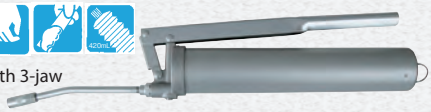

- Standard size grease gun with 3-jaw steel extension (CNP-2)
- Barrel with lipped follower for use with 500mL direct-filling or 420mL Bellows Cartridge

854787 CH-650LL

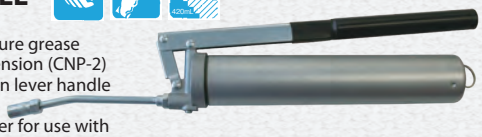

- Standard size high-pressure grease gun with 3-jaw steel extension (CNP-2)
- Ergonomic rubber grip on lever handle for comfortable use
- Barrel with lipped follower for use with 500mL direct-filling or 420mL Bellows Cartridge

854654 GC-57K

- Standard size grease gun with 3-jaw steel extension (CNP-2)
- Barrel with lipped follower for use with 500mL direct-filling or 400g DIN1284 Cartridge

Specifications

Model No.	Model	Length* (mm)	Extension	Weight* (kg)	Barrel Dia. (mm)	Barrel Capacity (mL)	Cartridge (mL)	Discharge per Stroke (mL)	Max Discharge Pressure (MPa)
854655	KH-16	241	CNP-2	0.44	38.0	140	85	0.4	10
854629	KH-120	232	HSP-1	0.51	38.0	140	85	0.6	20
854627	KH-35	290	HSP-1	1.11	59.6	400	210	1.0	25
854628	KH-32	412	HSP-1	1.27	59.6	200	------	1.6	25
854669	KH-500	368	CNP-2	1.30	59.6	500	420	1.0	50
854626	CH-400	368	HSP-2	1.29	59.6	------	420	1.0	50
854787	CH-650LL	401	CNP-1	1.30	59.6	550	420	1.0	80
854654	GC-57K	371	CNP-2	1.55	59.6	500	DIN 1284 (400g)	1.0	50

*Extension is not included

Dimensions

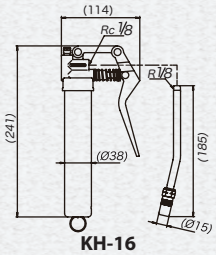

KH-16

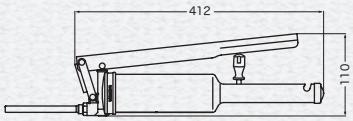

KH-32

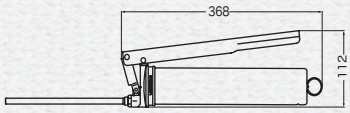

CH-400

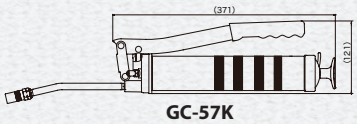

GC-57K

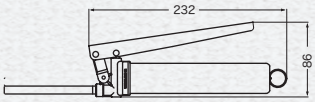

KH-120

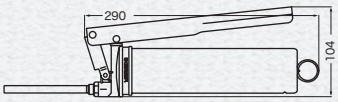

KH-35

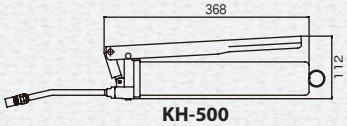

KH-500

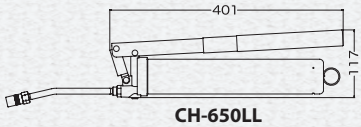

CH-650LL

Electric Driven Grease Guns

AC100V electric and DC24V battery operated hand held grease guns.
All models are only available with 420mL Bellows Cartridge.

852443 EG-400A

852441 EG-400D

852216 EG-400B

Specifications

Model No.	Model	Cartridge (mL)	Extension	Max Discharge Pressure (MPa)	Discharge Volume		Power Source	Power Rating (W)	Weight (kg)
852443	EG-400A	420	CNP-1	40	1.6mL/sec or above at 6MPa load		AC100V	240	2.7
852441	EG-400D			32	1.6mL/sec or above at 6MPa load		DC24V	430	2.7
852216	EG-400B*1			32	1.6mL/sec at 6MPa load	2.0mL/sec at 0.5MPa load	DC9.6V	------	2.49*2

*1 Battery Charger EG-1414-Y and Battery EG-9002-Y is equipped as standard
*2 Exclude battery

Battery Charger Specifications

Model No.	Model	Power Source	Frequency (Hz)	Capacity (VA)	Voltage (V)	Current (A)	Charging Time
684741	EG-1414-Y	AC100V	50/60	105	DC7.2-14.4	DC2.6	Approx 45 min.

Optional Accessories

Model No.	Model	Description	Fits model
802039	BC-165D	Extension Power Cord 15M	EG-400D
684741	EG-1414-Y	Battery Charger (AC100V)	EG-400B
683877	EG-9002-Y	Battery	EG-400B

Dimensions

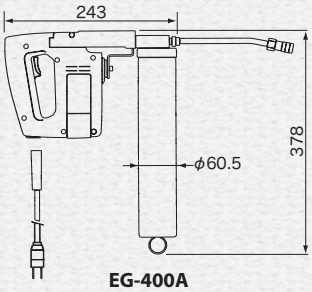

EG-400A

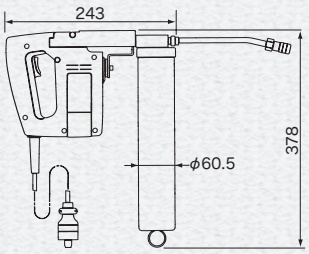

EG-400D

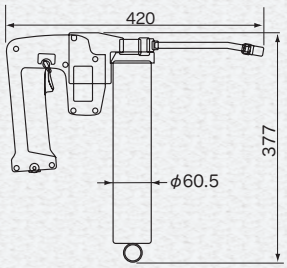

EG-400B

683877
EG-9002-Y

684741
EG-1414-Y

Air Operated Grease Guns

Grease flows continuously with press of the trigger.
Only available with 420mL Bellows Cartridge.

853755 AMG-400

Dimensions

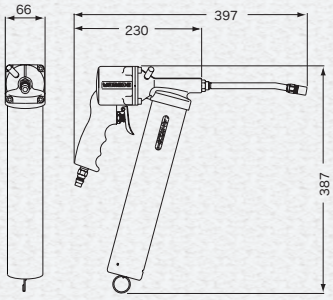

804918 AMG-AR

685472 AMG-RP

Battery Charger Specifications

Model No.	Model	Cartridge (mL)	Extension	Max Discharge Pressure (MPa)	Max Discharge Volume (mL/min)	Supply Air Pressure (MPa)	Weight (kg)
853755	AMG-400	420	CNP-2	32	280	0.2-0.7	1.8

Optional Accessories

Model No.	Model	Description	Fits model
804918	AMG-AR	Air Regulator	AMG-400
685472	AMG-RP	Swivel Air Plug	AMG-400

Extensions

Optional steel and flexible extensions for grease fittings are available. These can fit to all Hand Grease Guns.

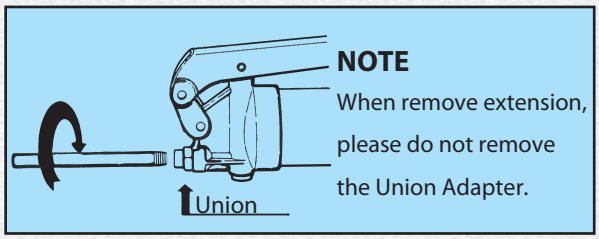

NOTE
When remove extension, please do not remove the Union Adapter.

Grease Fittings

JIS B 1575

Hydraulic Fitting
Most common fitting.

Pin Type Fitting

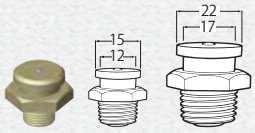

Button Head Fitting
Normal size and large size are available

804903 HSP-1

804904 HSP-2

800701 HSP-3

804907 HSP-10

804910 CNP-1

804911 CNP-2

804912 CNP-13

686445 CNP-1H

686446 CNP-2H

850664 SPK-1C

850665 SPK-2C

850666 SPK-3C

850392 SPK-5

850381 SPK-20C

851268 SPK-700E

850479 SPK-2C-1M

850478 SPK-1C-1M

850480 SPK-3C-1M

Specifications

Type	Model No.	Model	Length(mm)	Weight(g)	Usable Grease Fitting	Remark
Straight Steel Extension	804903	HSP-1	120	46	Hydraulic Fitting	
	804904	HSP-2	240	96		
	804909	HSP-3	135	56	----------	Nozzle O.D. 1.5mm
	804907	HSP-10	450	188	Hydraulic Fitting	
Steel Extension with 3-jaw Coupler	804910	CNP-1	185	93	Hydraulic Fitting	O.D. 17mm
	686445	CNP-1H	38.5	37		3-jaw Coupler for CNP-1
	804911	CNP-2	185	93		O.D. 15mm
	686446	CNP-2H	39	37		3-jaw Coupler for CNP-2
	804912	CNP-13	335	180		O.D. 15mm
Flexible Extension with 3-jaw Coupler Normal Operating Pressure: 21MPa	850664	SPK-1C	355	141	Pin Type Fitting	
	850665	SPK-2C	375	180	Button Head Fitting	
	850666	SPK-3C	330	83	Hydraulic Fitting	
	850478	SPK-1C-1M	1069	189	Pin Type Fitting	
	850479	SPK-2C-1M	1070	242	Button Head Fitting	
	850480	SPK-3C-1M	1030	132	Hydraulic Fitting	
	850392	SPK-5	418	300	Hydraulic Fitting	Extension for CNP Series
	850381	SPK-20C	377	320	Large size Button Head Fitting	
	851268	SPK-700E	705	160	Hydraulic Fitting	

Dimensions

HSP-1 HSP-2
HSP-10

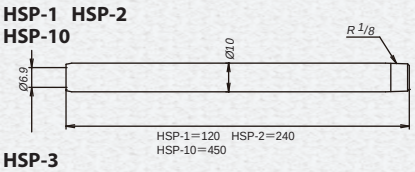

HSP-3

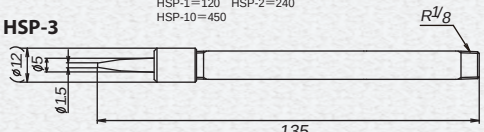

CNP-1

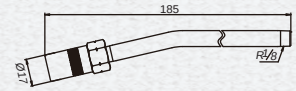

CNP-1H

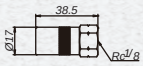

CNP-2 · 13

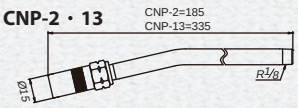

CNP-2H

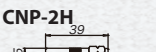

SPK-1C · SPK-1C-1M

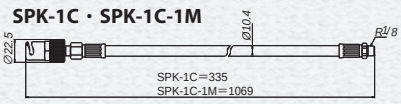

SPK-700E

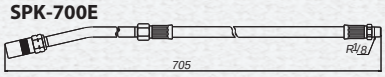

SPK-2C · SPK-2C-1M

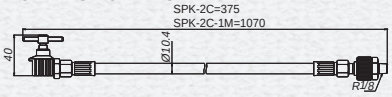

SPK-20C

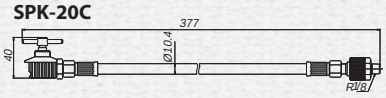

SPK-3C · SPK-3C-1M

SPK-5

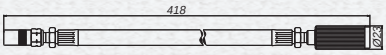

Bellows Cartridge Greases

YAMADA Bellows Cartridge Grease is reputed as clean, convenient and economical cartridge grease, which is long-selling product in Japan.
With the tightly-sealed bellows, contamination and air-pocket can be eliminated.
By the screw cap, the cartridge change is possible in the middle of use.

General Purpose Greases

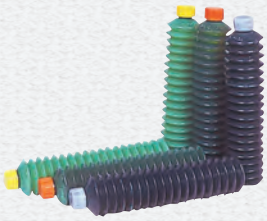

MMG-80 Series

MMG-200 Series

MMG-400 Series

Dimensions

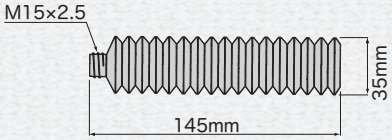

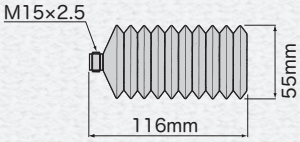

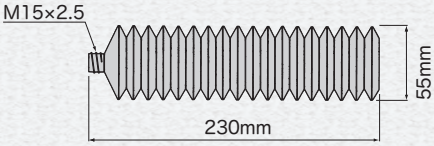

Specifications

Capacity, Qty per Carton Box	Model No.	Model	Grease Type	NLGI No.	ASTM Value	Temp Range	Fits model
420mL, 20pcs	682314	MMG-400MP	Lithium	No.2	265-295	-15℃ - 130℃	KH-500, CH-400, CH-650LL, EG-400A,EG-400D,EG-400B, AMG-400
	682313	MMG-400CG	Chassis	No.1	310-340	-10℃ - 80℃	
	682312	MMG-400MO	Molybdenum	No.2	265-295	-15℃ - 150℃	
210mL, 20pcs	683311	MMG-200MP	Lithium	No.2	265-295	-15℃ - 130℃	KH-35
	683312	MMG-200CG	Chassis	No.1	310-340	-10℃ - 80℃	
	683313	MMG-200MO	Molybdenum	No.2	265-295	-15℃ - 150℃	
85mL, 30pcs	682593	MMG-80MP	Lithium	No.2	265-295	-15℃ - 130℃	KH-16,KH-120
	683309	MMG-80CG	Chassis	No.1	310-340	-10℃ - 80℃	
	683310	MMG-80MO	Molybdenum	No.2	265-295	-15℃ - 150℃	

Grease Characteristics

Grease Type	Features	Applications	Color of Cap	Color of Bellows
Lithium Grease (MP)	Extreme-pressure, Water-resistant, Heat-resistant, High durability	Bearings for industrial equipment, automobiles, construction equipment and conveyor	Yellow	Green
Chassis Grease (CG)	Extreme-pressure, Water-resistant	Chassis of automobiles, construction equipment, conveyor and agrucultural equipment	Orange	
Molybdenum Grease (MO)	Molybdenum-added, Extra high-pressure, Extra high-durrability	Construction equipment, joints, bearings, the part on which needs high-pressure and heating	White	

High Temp and Food Grade Greases

NPC-AA

FDL-FF20

Dimensions

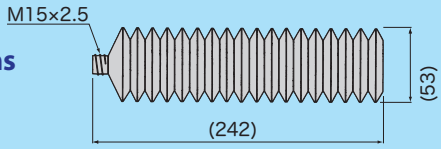

Specifications

Capacity, Qty per Carton Box	Model No.	Model	Grease Type	NLGI No.	ASTM Value	Temp Range	Fits model
420mL, 20pcs	684200	NPC-AA	Urea	No.2	265-295	-20℃-180℃	KH-500, CH-400, CH-650LL, EG-400A, EG-400D, EG-400B, AMG-400
	685800	FDL-FF20	Aluminum Complex	No.2	265-295	-20℃-180℃	
420mL, 5pcs	685801	FDL-FF5					

Grease Characteristics

Grease Type	Features	Applications	Color of Cap	Color of Bellows
Urea Grease (AA)	Extra high-temperature	Equipment for heavy industry, paper industry, cement industry, and any other application that require high heat resistance and long life	White	Green
Aluminum Complex (FF)	Meets the requirements by NSF-H1	Food industry		White

Hand-Operated Oil Pumps

Oil Bucket Pumps EXS Series

Ready-to-assemble economical series.
The small package can reduce shipping cost.

880626 STB-60EXS

880627 STB-70EXS

Installation

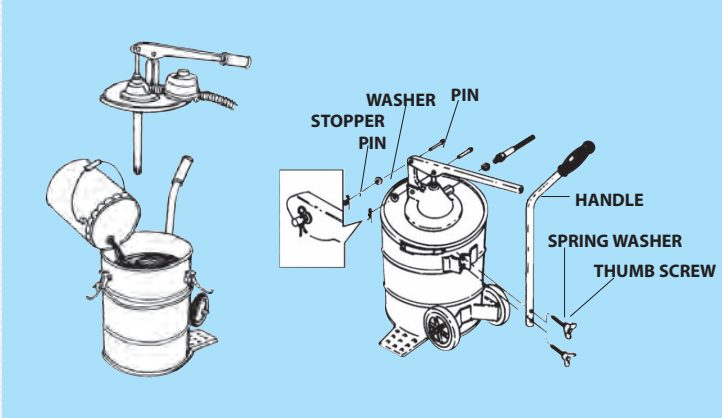

Specifications

Model No.	Model	Capacity (L)	Discharge Volume per Cycle (mL)	Stroke Length (mm)	Weight (kg)	Accessories
880626	STB-60EXS	20	40.0	50.0	10.4	802823 STB-2MW Hose Nozzle Assy 2M (Vynil)·····1 851942 STB-M Oil Meter·····1
880627	STB-70EXS				9.0	802823 STB-2MW Hose Nozzle Assy 2M (Vynil)·····1

Dimensions

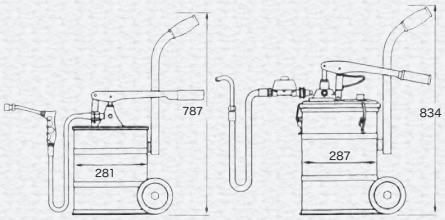

STB-70EXS STB-60EXS

Oil Bucket Pumps

Please select suitable model depending on by the presence or absence of S-20 Dolly and STB-M Oil Meter.

880134 STB-50

880135 STB-60

880136 STB-70

Installation

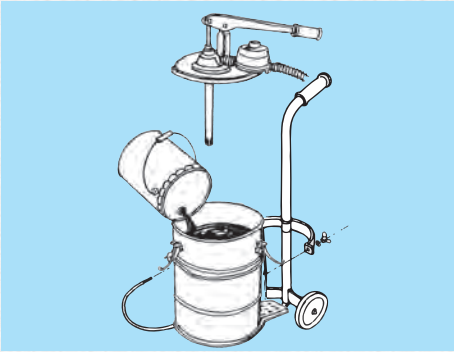

Specifications

Model No.	Model	Capacity (L)	Discharge Volume per Cycle (mL)	Stroke Length (mm)	Weight (kg)	Accessories
880134	STB-50	20	40.0	50.0	7.3	695453 STB-2MB Hose Nozzle Assy 2M (Rubber)···1
880135	STB-60				10.4	695453 STB-2MB Hose Nozzle Assy 2M (Rubber)···1 851003 S-20 Dolly·····1 851942 STB-M Oil Meter·····1
880136	STB-70				9.2	695453 STB-2MB Hose Nozzle Assy 2M (Rubber)···1 851003 S-20 Dolly·····1

Dimensions

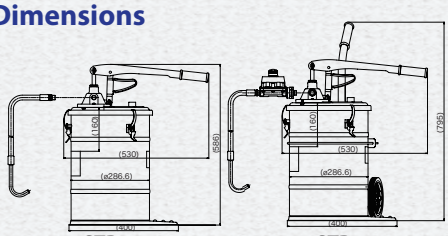

STB-50 STB-60

Optional Accessories

Model No.	Model	Description	Fits Model
851003	S-20	Dolly	STB-50, STB-60, STB-70
851942	STB-M	Flow Meter	STB-50, STB-60, STB-70
695453	STB-2MB	Hose Nozzle Assy 2M (Rubber)	STB-50, STB-60, STB-70
802823	STB-2MW	Hose Nozzle Assy 2M (Vynil)	STB-60EXS, STB-70EXS

851003 S-20

851942 STB-M

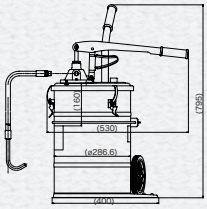

STB-70

Hand Oil Suction Guns

Simple syringe pump for oil.

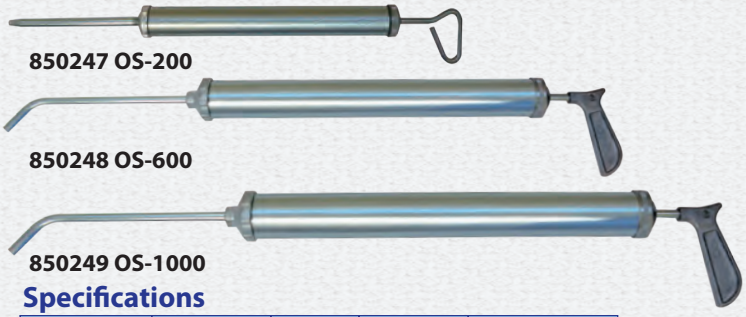

850247 OS-200

850248 OS-600

850249 OS-1000

Dimensions

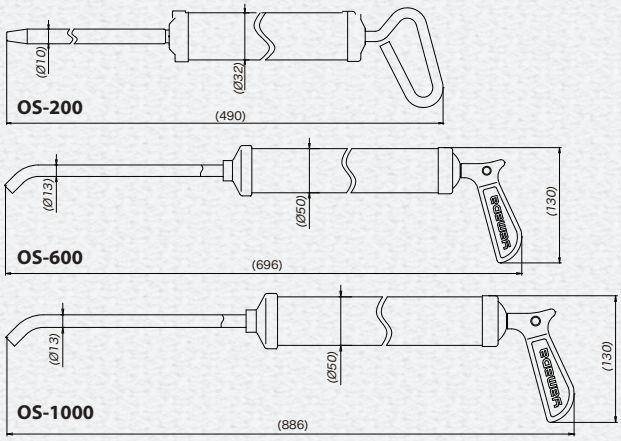

Specifications

Model No.	Model	Length (mm)	Weight (kg)	Capacity (mL)
850247	OS-200	490	0.57	200
850248	OS-600	696	1.28	600
850249	OS-1000	886	1.77	1000

Oil Pail Pump

880571 HOP-20

Simple pump that can be mounted on commercially available 20L pail. Oil meter STB-M can be mounted.

Specifications

Model No.	Model	Discharge Volume per Cycle (mL)	Stroke Length (mm)	Weight (kg)	Accessories
880571	HOP-20	60.0	110.0	1.9	802823 STB-2MW Hose Nozzle Assy 2M (Vynil)·····1 851676 S-10N Dolly·····1

Dimensions

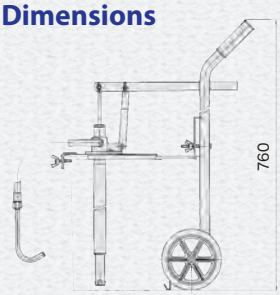

Oval Shape Oil Bucket Pumps

880318 LPO-50

Small size and durable oval shape bucket pump. Suitable for field lubrication work.

Specifications

Model No.	Model	Discharge Volume per Cycle (mL)	Weight (kg)	Accessories
880318	LPO-50	40.0	8.8	802823 STB-2MW Hose Nozzle Assy 2M (Vynil)·····1

Dimensions

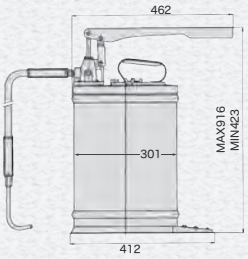

High Viscosity Oil Pumps

880132 VO-8
Compact size bucket pump

880133 VO-50
Small size oval shape bucket pump

Specifications

Model No.	Model	Discharge Volume per Cycle (mL)	Weight (kg)	Accessories
880132	VO-8	20.0	5.0	695056 VO8-1M 1/4 x 1m Hose·····1 800772 VO8-15 Button Head Coupler·····1
880133	VO-50	24.0	9.6	695055 VO50-1.5M 3/8 x 1.5m Hose·····1 800894 VO50-15 Button Head Coupler·····1

Dimensions

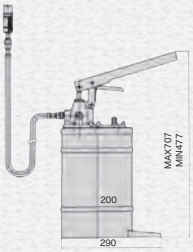

VO-8

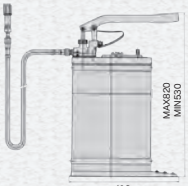

VO-50

Optional Accessories

800772 VO08-15
Button Head Coupler for VO-8

800894 VO50-15
Normal Size Button Head Coupler for VO-50

800628 VO50-22
Large Size Button Head Coupler for VO-50

Hand-Operated Grease Pumps

Grease Bucket Pump EXS Series

Ready-to-assemble economical series. The small package can reduce shipping cost.

880624 SK-77EXS

Installation

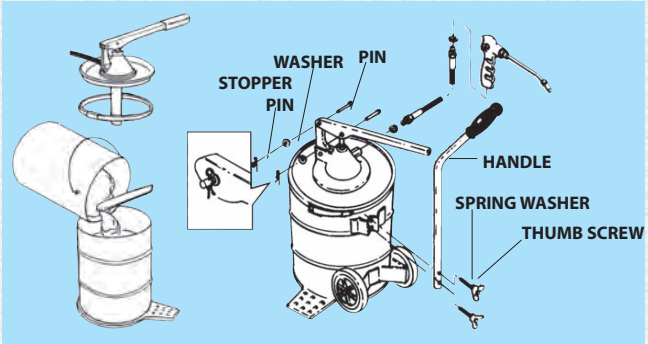

Dimensions

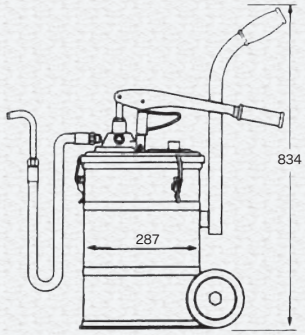

Specifications

Model No.	Model	Capacity (L)	Discharge Pressure (MPa)	Discharge Volume per Stroke (g)	Stroke Length (mm)	Weight (kg)	Accessories
880624	SK-77EXS	20	25.0	3.2	38-43	9.6	800601 SK-G Grease Nozzle……1 695046 SK-2M Grease Hose 2M……1

Grease Bucket Pump

Follower plate is equipped with SK-55 and SK-77 as standard.
Compact SK-8 is suitable for filed lubrication work.

880307 SK-55

880308 SK-77

880276 HPG-50

880194 SK-8

Installation

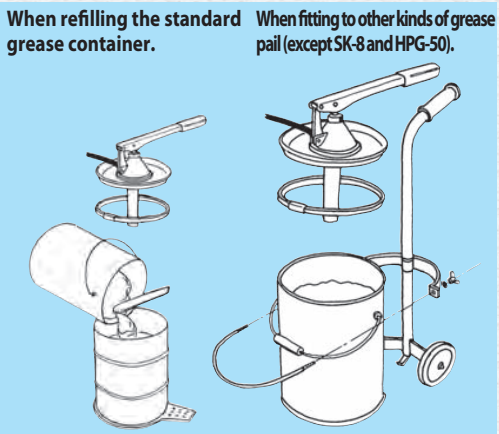

Dimensions

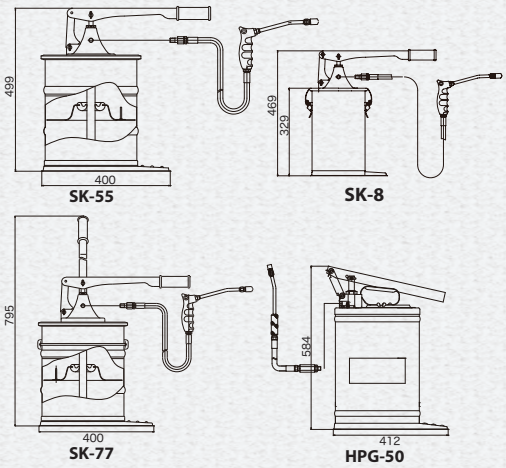

Specifications

Model No.	Model	Capacity (L)	Discharge Pressure (MPa)	Stroke Length (mm)	Weight (kg)	Accessories
880307	SK-55	20	25.0	50.0	9.6	800601 SK-G Grease Nozzle……1 695046 SK-2M Grease Hose 2M……1 801426 Follower Plate……1
880308	SK-77	20	25.0	50.0	9.6	800601 SK-G Grease Nozzle……1 695046 SK-2M Grease Hose 2M……1 801426 Follower Plate……1 851003 S-20 Dolly……1
880194	SK-8	10	25.0	—	6	800601 SK-G Grease Nozzle……1 695046 SK-2M Grease Hose 2M……1
880276	HPG-50	10	25.0	—	9	695271 Grease Hose 1.5M……1 804911 CNP-2 Steel Extension……1

Optional Accessories

Model No.	Model	Description	Fits Model
851003	S-20	Dolly	SK-55, SK-77
695046	SK-2M	Grease Hose 2M Max 18MPa	SK-55, SK-77, SK-77EXS, SK-8
695100	SK-3M	Grease Hose 3M Max 18MPa	SK-55, SK-77, SK-77EXS, SK-8
695102	SK-5M	Grease Hose 5M Max 18MPa	SK-55, SK-77, SK-77EXS, SK-8

851003 S-20

Replacement Hoses

Air-Operated Oil Lubricators

Standard SGR-55 and high volume, high pressure SGR110A5 are available.
SGR110A5 is equipped with float-type oil level gauge and mechanical oil flow meter with non-drip flexible extension as a standard.

880267 SGR-55

880635 SGR110A5

Dimensions

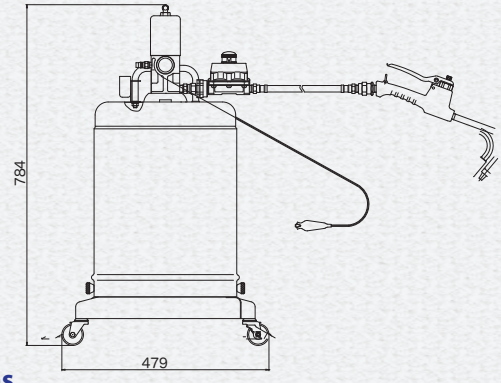

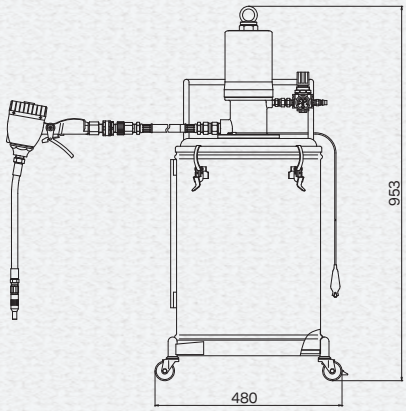

Specifications

Model No.	Model	Capacity (L)	Pump Ratio	Max Discharge Pressure (MPa)	Max Discharge Volume (L/min)	Max Air Consumption(NL/min)	Weight (kg)	Accessories
880267	SGR-55	20 (Attached pail can)	1.8:1	1.2	7.0	200	17.0	850792 SGR-55PA Oil Transfer Pump……1 850206 SGR-5TG Oil Dispense Gun……1 695052 SGR-55-1.5M Oil Hose 1.5M……1 851942 STB-M Oil Meter……1 682905 Pail Can……1 680743 PS-20PM Air Coupler Plug……1
880635	SGR110A5	50	5:1	3.5	11.0	390	27.5	851755 PD110A5 Oil Transfer Pump……1 801428 LBM-G Lube Mechanical Meter ……1 801195 NDN-H Flexible Extension……1 804553 OIL-SJ Swivel Joint……1 695700 110H-3M Oil Hose 3M……1 802553 AR-110A Air Regulator w/ Air Plug……1

Optional Accessories

Model No.	Model	Description	Fits Model
695052	SGR-55-1.5M	Oil Hose 1.5M Max 7MPa	SGR-55
695051	SGR-55-2M	Oil Hose 2M Max 7MPa	SGR-55
695103	SGR-55-3M	Oil Hose 3M Max 7MPa	SGR-55
695154	SGR-55-5M	Oil Hose 5M Max 7MPa	SGR-55
695866	110H-1M	Oil Hose 1M Max 7MPa	SGR110A5
695092	110H-2M	Oil Hose 2M Max 7MPa	SGR110A5
695700	110H-3M	Oil Hose 3M Max 7MPa	SGR110A5
695156	110H-5M	Oil Hose 5M Max 7MPa	SGR110A5

Replacement Hoses

Air-Operated Grease Lubricators

Air-Operated Grease Lubricators. Available with 16kg pail.

880870 SKR-55

880877 SKR-66

Dimensions

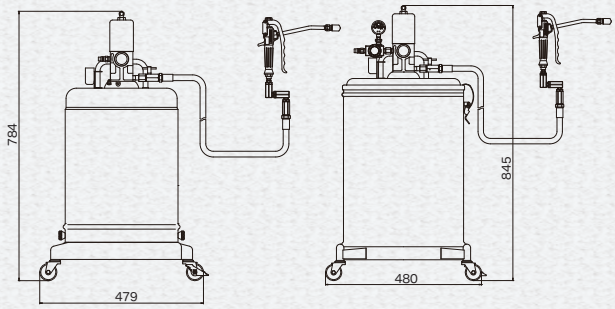

SKR-55 SKR-66

880631 SKR-110A50

880873 KPL-55

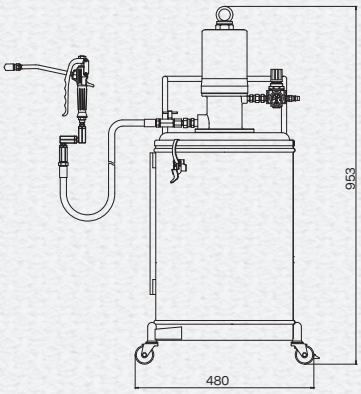

SKR-110A50

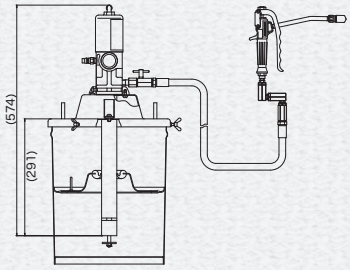

KPL-55

Specifications

Model No.	Model	Container	Pump Ratio	Max Discharge Pressure (MPa)	Max Discharge Volume (g/min)	Max Air Consumption (g/min)	Weight (kg)	Accessories
880870	SKR-55	Pail	55：1	38.5	320	212	13.5	852498 SKR-55PA Grease Transfer Pump·····1 851985 HPG-G HP Grease Gun·····1 695034 SKR-2.5M Grease Hose 2.5M·····1 800766 Check Valve·····1 680743 PS-20PM Air Coupler Plug·····1
880877	SKR-66	Pail	55：1	38.5	320	212	17.6	852764 SKR-66PA Grease Transfer Pump·····1 851985 HPG-G HP Grease Gun·····1 695034 SKR-2.5M Grease Hose 2.5M·····1 800766 Check Valve·····1 802161 Follower Plate·····1 801241 SKR-AR Air Regulator w/ Air Plug·····1
880631	SKR-110A50	Pail	50：1	35.0	1200	320	25.0	851779 PD110A50P Grease Transfer Pump·····1 851985 HPG-G HP Grease Gun·····1 695034 SKR-2.5M Grease Hose 2.5M·····1 800431 Check Valve·····1 803481 Follower Plate·····1 802553 AR-110A Air Regulator w/ Air Plug·····1
880873	KPL-55	Pail	55：1	38.5	320	212	9.4	852765 KPL-55PA Grease Transfer Pump·····1 851985 HPG-G HP Grease Gun·····1 695034 SKR-2.5M Grease Hose 2.5M·····1 800766 Check Vavle·····1 802161 Follower Plate·····1

Optional Accessories

Model No.	Model	Description	Fits Model
802161		Follower Plate	SKR-55, SKR-66, KPL-55
802335	KPL-55C	Caster	KPL-55
695062	SKR-1.5M	Grease Hose 1.5M Max 42MPa	SKR-55, SKR-66, SKR-110A50, KPL-55
695050	SKR-2M	Grease Hose 2M Max 42MPa	SKR-55, SKR-66, SKR-110A50, KPL-55
695034	SKR-2.5M	Grease Hose 2.5M Max 42MPa	SKR-55, SKR-66, SKR-110A50, KPL-55
695049	SKR-3M	Grease Hose 3M Max 42MPa	SKR-55, SKR-66, SKR-110A50, KPL-55
695098	SKR-5M	Grease Hose 5M Max 42MPa	SKR-55, SKR-66, SKR-110A50, KPL-55
695335	SKR-7M	Grease Hose 7M Max 42MPa	SKR-55, SKR-66, SKR-110A50, KPL-55
695099	SKR-10M	Grease Hose 10M Max 42MPa	SKR-55, SKR-66, SKR-110A50, KPL-55

802335 KPL-55C

802161Follower Plate

Replacement Hoses

Electric Driven Grease Lubricators

AC100V electric, AC240V electric and DC24V battery driven grease lubricators.
Available with JIS18L/20L pail.

880899 EPL-100 / 881081 EPL-240

880639 KPL-24

Dimensions

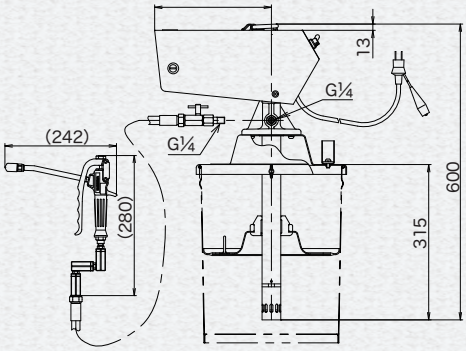

EPL-100 / EPL-240

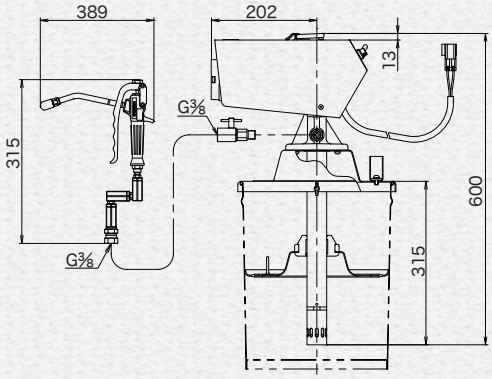

KPL-24

Specifications

Model No.	Model	Usable Container	Power Source	Discharge Volume (g/min)	Max Discharge Pressure (MPa)	Rotationg Speed (rpm)	Quake Resistance	Weight (kg)	Accessories
880899	EPL-100	JIS 18L Pail	AC100V 100W 2.0A	120-190	28	90-145	4G	13.0	851985 HPG-G HP Grease Gun……1 695034 SKR-2.5M Grease Hose 2.5M……1 803085 Follower Plate……1 802493 Power Cord Assy……1
881081	EPL-240		AC240V 100W 0.83A						
880639	KPL-24	JIS 18L Pail	DC24V 90W 6.3A	80-120	28 (30min,rating)	95-108	4G	12.0	852164 HPG-G13 HP Grease Gun……1 803085 Follower Plate……1 685940 Union Adapter……1 802704 Power Cord Assy……1

Optional Accessories

Model No.	Model	Description	Fits Model
851003	S-20	Dolly	EPL-100, EPL-240, KPL-24
802335	KPL-55C	Caster	EPL-100, EPL-240, KPL-24
695062	SKR-1.5M	Grease Hose 1.5M Max 42MPa	EPL-100, EPL-240
695050	SKR-2M	Grease Hose 2M Max 42MPa	EPL-100, EPL-240
695034	SKR-2.5M	Grease Hose 2.5M Max 42MPa	EPL-100, EPL-240
695049	SKR-3M	Grease Hose 3M Max 42MPa	EPL-100, EPL-240
695098	SKR-5M	Grease Hose 5M Max 42MPa	EPL-100, EPL-240
695335	SKR-7M	Grease Hose 7M Max 42MPa	EPL-100, EPL-240
695099	SKR-10M	Grease Hose 10M Max 42MPa	EPL-100, EPL-240
695303	KPL-24-10M	Grease Hose 10M Max 42MPa	KPL-24
802817	KPL-E5M	Extension Power Cord 5M	KPL-24
683239	KPL-BK	Cover	KPL-24
854859	HR-3C15	Open Hose Reel 15M	KPL-24

854859 HR-3C15

851003 S-20

Replacement Hoses

802817 KPL-E5M

683239 KPL-BK

802335 KPL-55C

Air-Operated Oil Transfer Pumps

Oil Transfer Drum Pumps

Air-operated oil transfer pumps. Drum Bung Adapter is equipped as a standard.

852628 DR-50A1

852633 DR-50A3

880966 DR-90A3

Dimensions

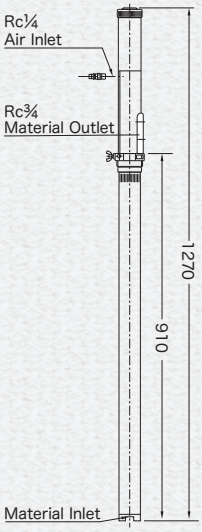

DR-50A1

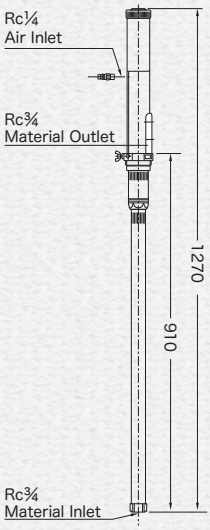

DR-50A3

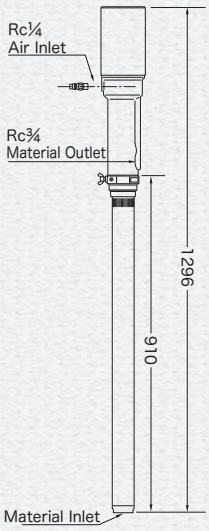

DR-90A3

Specifications

Model No.	Model	Pump Ratio	Max Discharge Volume (g/min)	Max Air Consumption (g/min)	Weight (kg)	Discharge Port
852628	DR-50A1	1 : 1	29.0	460	5.0	Rc3/4”
852633	DR-50A3	3 : 1	12.0	470	5.4	
880966	DR-90A3		22.0	550	7.1	

Oil Transfer Siphon Pumps

Short shank type. Suitable for wall mounting.

852629 SH-50A1

852634 SH-50A3

880967 SH-90A3

Dimensions

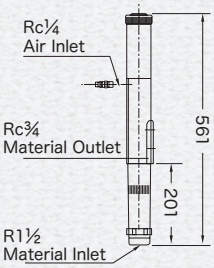

SH-50A1

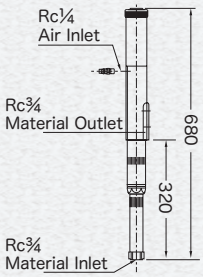

SH-50A3

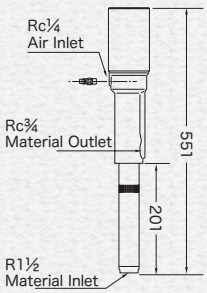

SH-90A3

Specifications

Model No.	Model	Pump Ratio	Max Discharge Volume (g/min)	Max Air Consumption (g/min)	Weight (kg)	Discharge Port
852629	SH-50A1	1 : 1	29.0	460	2.6	Rc3/4”
852634	SH-50A3	3 : 1	12.0	470	3.3	
880967	SH-90A3		22.0	550	4.5	

Pressure Relief Valve & Return Hose

Devices for the purpose of protecting pump, pipe and control valves. When internal pressure of pipe reaches predetermined limit, the Pressure Relief Valve opens and the excess oil is released from the pipe to the drum/tank through the Return Hose.

Model No.	Model	Description
682428	PRV-7	Pressure Relief Valve
695358		Return Hose

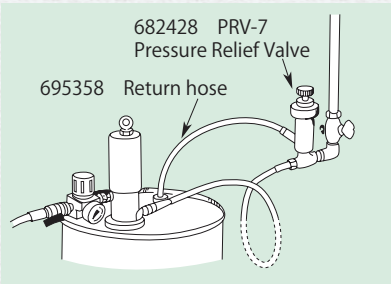

Wall/Floor Mounting Sets

Wall/Floor mounting sets for Oil Transfer Siphon Pumps.

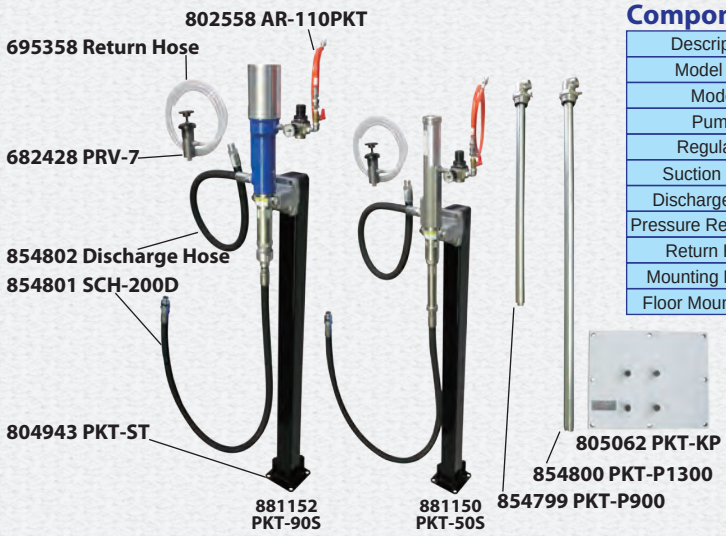

Components

Description	Wall Mounting Set		Floor Mounting Set	
Model No.	881149	881151	881150	881152
Model	PKT-50	PKT-90	PKT-50S	PKT-90S
Pump	852634 SH-50A3	880967 SH-90A3	852634 SH-50A3	880967 SH-90A3
Regulator	802558 AR-110PKT (with R1/4×1.5m Hose)			
Suction Hose	854801 SCH-200D			
Discharge Hose	854802 Discharge Hose (R3/4×1.5M)			
Pressure Relief Valve	682428 PRV-7			
Return Hose	695358 Return Hose			
Mounting Bracket	800400 MTB-SH			
Floor Mount Stand	----------		804943 PKT-ST	

Optional Accessories

Model No.	Model	Description	Remark
854799	PKT-P900	Suction Pipe for 200L Drum	L=906mm
854800	PKT-P1300	Suction Pipe for Tank	L=1,300mm
805062	PKT-KP	Wall Mounting Panel	Fits to PKT-50,PKT-90

Dolly Sets

Mobile Unit equipped with type 110 air-operated oil pump. *Drum is not included

881083 LDS-110 881085 LDS-110R 881084 LDS-110K

Components

Model No.	Model	Pump	Air Regulator	Control Valve	Extension	Swivel Joint	Oil Hose	Dolly	Hose Reel
881083	LDS-110	851754 DR110A5	802553 AR-110A	801428 LBM-G	801152 NDN-P	804553 OIL-SJ	695156 110H-5M	802424 LDS-CT	---------
881085	LDS-110R						695866 110H-1M		854856 HR-4G15
881084	LDS-110K	851753 SH110A5	802558 AR-110PKT				695156 110H-5M		---------
		Suction Hose		Suction Pipe		Mounting Bracket		Wall Mounting Panel	
		854801 SCH-200D		854799 PKT-P900		800400 MTB-SH		805062 PKT-KP	

Liquid Level Alarms

When the liquid level reaches a predetermined limit, this totally pneumatic liquid level sensor automatically stop the pumps and it blows the whistle instead.
It can be mounted to 200L drum directly by 3/4" bung adapter.
When using with Pressure Relief Valve (PRV-7) and Return Hose, please use RL-SA Return Hose Adapter.

480007
SA-4100

480008
SA-4110

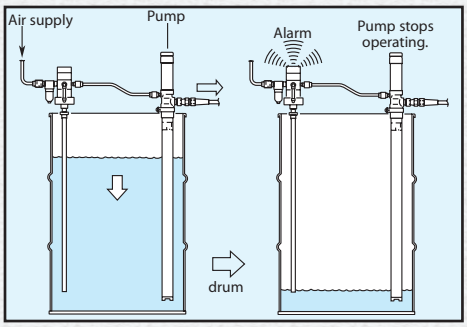

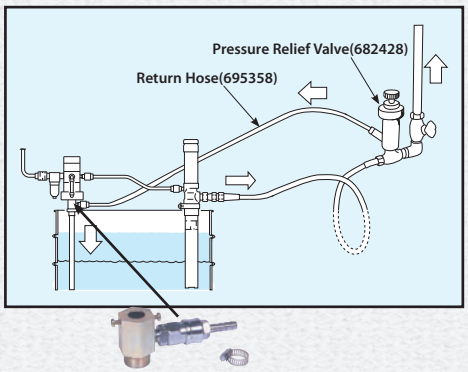

802781 RL-SA
Return Hose Adapter

Specifications

Model No.	Model	Application	Air Pressure (MPa)	Max Output Air Flow (L/min ANR)	Viscosity Limit	Weight (kg)	Accessories
480007	SA-4100	Lower limit detection	0.25-0.7	1000	2.5Pa-s (2,500cps)	2.2	680743 PM-20PM Air Coupler
480008	SA-4110	Upper limit detection					

Air-Operated Grease Transfer Pumps

Grease Transfer Drum Pumps

Air-operated Drum Cover and follower plate kit for 180kg (400lb) and 55kg (120lb) drum.
Grease Gun and wide variety of length of Grease Hoses can be chosen.

Follower Plates
801977
Follower Plate for 55kg(120lb)
802883
Follower Plate for 180kg(400lb)

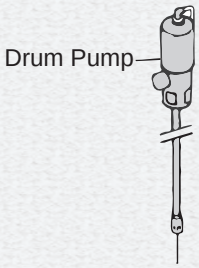

802422 Drum Cover for 55kg (120lb)

704143 Drum Cover for 180kg (400lb)

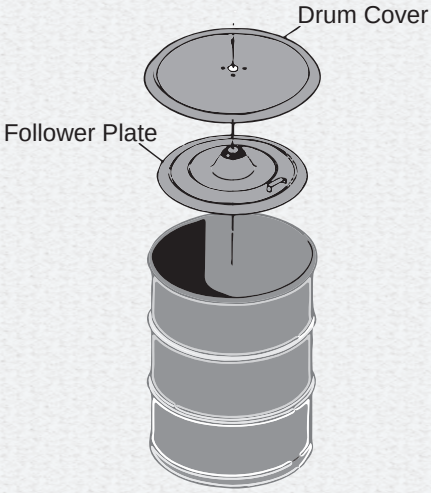

Dimensions

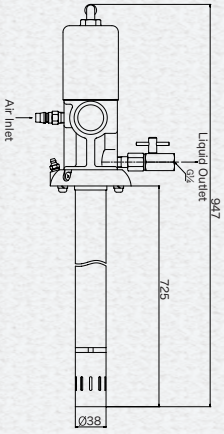

880846 SKR-725A55
Drum Pump for 55kg(120lb) Drum

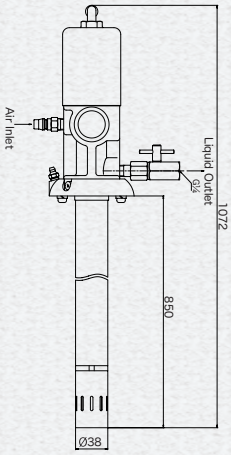

880847 SKR-850A55
Drum Pump for 180kg(400lb) Drum

Grease Hoses

Model No.	Model	Description
695062	SKR-1.5M	Grease Hose 1.5M Max 42MPa
695050	SKR-2M	Grease Hose 2M Max 42MPa
695034	SKR-2.5M	Grease Hose 2.5M Max 42MPa
695049	SKR-3M	Grease Hose 3M Max 42MPa
695098	SKR-5M	Grease Hose 5M Max 42MPa
695335	SKR-7M	Grease Hose 7M Max 42MPa
695099	SKR-10M	Grease Hose 10M Max 42MPa

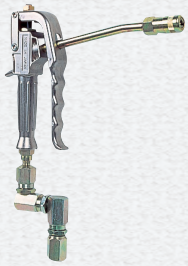

851985 HPG-G
HP Grease Gun

Model No.	Model	Description	Components
851985	HPG-G	HP Grease Gun	852165 Gun Body·····1 800547 CNP-2·····1 802910 HPG-J Swivel·1

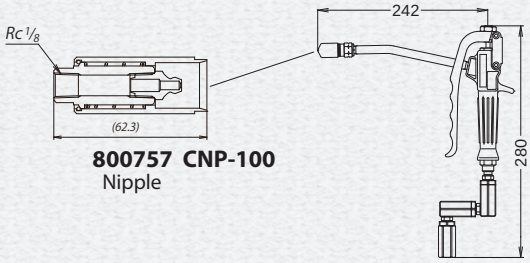

800757 CNP-100
Nipple

851985 HPG-G

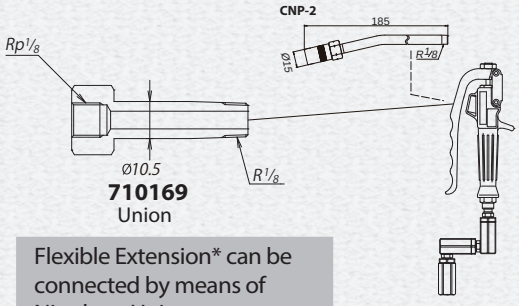

710169
Union

Flexible Extension* can be connected by means of Nipple or Union

*See page 3 for detail

851985 HPG-G

Specifications

Model No.	Model	Shank Length (mm)	Suitable Container	Pump Ratio	Max Discharge Pressure (MPa)	Max Discharge Volume (g/min)	Max Air Consumption (NL/min)	Weight (kg)	Components
880846	SKR-725A55	725	55kg (120Lbs)	55:1	38.5	320	212	5.8	852500 SKR-725P55 Pump·····1 802159 Pump Flange·····1 800766 Check Valve·····1
880847	SKR-850A55	850	180kg (400Lbs)	55:1	38.5	320	212	6.8	852501 SKR-850P55 Pump·····1 802159 Pump Flange·····1 800766 Check Valve·····1

Compact Reel YR Series

Air Hose Reels

Compact and light-weight air hose reels with durable and flexible 1/4"x 10M hose.

Installation

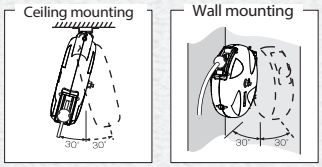

Swing function is equipped as a standard

Easy Coupling

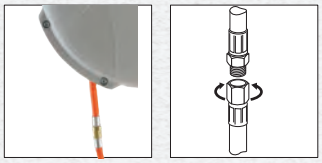

Delivery hose can be changed easily by "Easy Coupling"

Spark Resistant Hose

YR-2A10S is equipped with spark resistant hose

Dimensions

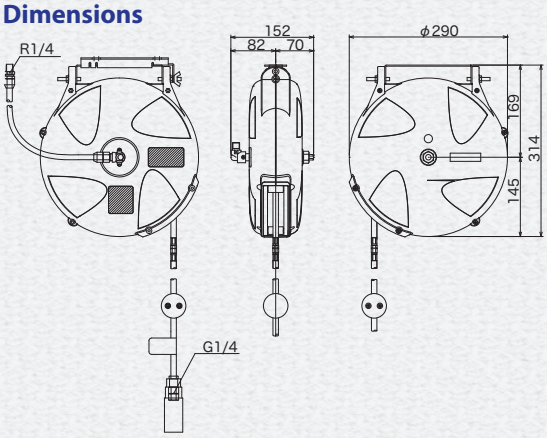

Specifications

Model No.	Model	Delivery Hose				Max Pressure (MPa)	Inlet Hose		Weight (kg)
		I.D. (mm)	Length (M)	Connection	Material		Length (m)	Connection	
686608	YR-2A10	6.5	10.0	G1/4"	Urethane	1.4	0.8	R1/4"	3.5
686609	YR-2A10S				Urethane (Spark Resistant)				

Control Cord Reels

Compact and light-weight reels for remote controller. 4-core,6-core and 9-core cord are available.

Dimensions

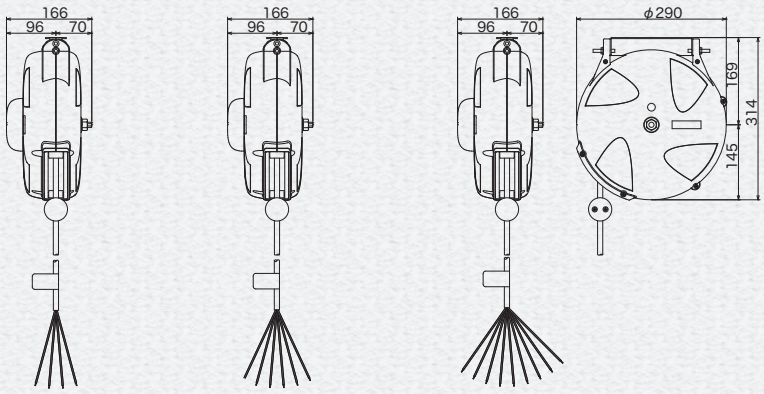

Specifications

Model No.	Model	Service Cord		Voltage / Current	Temp Range (°C)	Inlet Cord		Weight (kg)
		Cross Section Area(mm2) x No. of Core	Length (M)			Length (M)	Connection	
686611	YR-4D08	0.75 x 4	8.0	AC/DC24V/0.5A	-5 - 50	8.0	Pin type terminal plug	3.8
686612	YR-6D08	0.75 x 6						3.9
686613	YR-9D08	0.5 x 9						4.0

Hose Reels

Open type hose reel with durable engineering plastic reel drum.
Angle of delivery hose outlet can be adjusted depending of place of installation.

854671 HR-4A15 | **854857 HR-3G10** | **854856 HR-4G15** | **854859 HR-3C15** | **854855 HR-4W15** | **854858 HR-3WH15**

Specifications

Media	Model No.	Model	I.D. x Length x Connection		Max Pressure (MPa)	Temp Range (°C)	Weight (kg)	Dimensions (mm) H x W x Ø	Mounting Dimension (mm)
			Delivery Hose	Inlet Hose					
Air	854671	HR-4A15	1/2"x15MxR1/2"	1/2"x1MxR1/2"	1.5	-20 - 60	11.2	590 x 198 x 476	125 x 157 x 4-Ø13
Oil	854857	HR-3G10	3/8"x10MxG3/8"	1/2"x1MxG1/2"	7.5	-40 - 100	12.1	560 x 223 x 426	
	854856	HR-4G15	1/2"x15MxG1/2"				16.3	590 x 238 x 476	
Grease	854859	HR-3C15	3/8"x15MxG3/8"	3/8"x1MxG3/8"	35.0		16.9	560 x 228 x 426	
Water	854855	HR-4W15	1/2"x15MxR1/2"	1/2"x1MxR1/2"	1.5	-30 - 100	13.7	590 x 198 x 476	
HP Hot Water	854858	HR-3WH15	3/8"x15MxG3/8"	3/8"x1MxG3/8"	25.0MPa (50°C) 10.0MPa (150°C)	-40 - 155	13.8	560 x 227 x 426	

Mounting Brackets

By simply using Mounting Rail and Mounting Bracket, it is possible to install multiple HR series hose reels onto the ceiling easily.

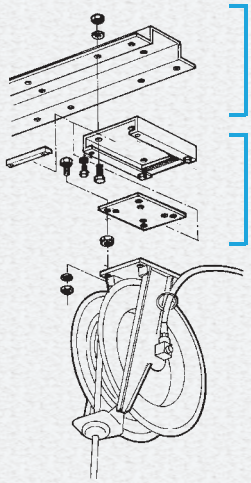

Mounting Rail

No. of Reel	Model No.	Model	Length (mm)	Weight (mm)
1	704439	R-1	140	1.5
2	704440	R-2	520	5.3
3	704441	R-3	900	9.2
4	704442	R-4	1280	13.0

801951 RK-S
Mounting Bracket

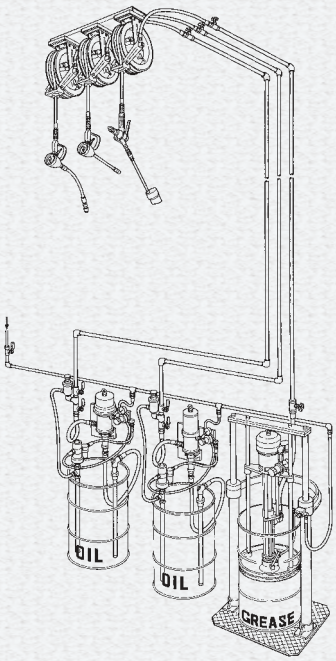

Swing Brackets increase range of use at the wall-mounted.

N372407 RK-W
Wall mounting swing bracket (SPCC)

N372408 RK-WSUS
Wall mounting swing bracket (SUS)

Control Valves

Wide variety of control valves available

804553 OIL-SJ
Swivel joint
Rc3/8 and Rc1/2 x R1/2

804536 LBM-P
Preset batch meter digital type

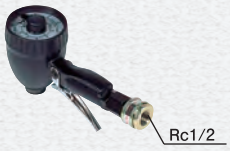

801428 LBM-G
Lube mechanical meter

802765 LBM-D
Digital meter

801429 LBM-60
802238 LBM-30
802237 LBM-16
Mechanical preset meter

804569 NDN-FS
Non-drip flexible pipe extension with swivel nozzle

802865 NDN-F
Non-drip flexible pipe extension

801195 NDN-H
Non-drip flexible hose extension

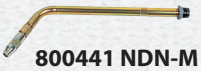

800441 NDN-M
Non-drip steel extension 60° angled head

801204 NDN-L
Non-drip steel extension L-shape pipe

804570 NDN-PS
Non-drip steel extension with swivel nozzle

801152 NDN-P
Non-drip steel extension

705387 NDZ-P
Steel extension

800440 NDN-G
Non-drip steel extension right-angled head

850139 HDV-G
High volume gear oil dispenser

850138 HDV-M
High volume motor oil dispenser

851137 ODV-T
Non-drip oil dispenser T type

851138 ODV-M
Compact size oil dispenser with flow meter

851136 ODV-L
Non-drip oil dispenser L type

800680 DN-L
Non-drip steel extension L type

800730 DN-T
Non-drip steel extension T type

851985 HPG-G
HP Grease Gun

686654 YCL-18LED
AC100V-7W LED pendant light

686653 YCL-18
AC100V-13W fluorescent pendant light

SJ-S Swivel Joint

N431510	1/2×3/8	Brass
N431610	1/2×1/2	Brass
N431710	1/2×3/4	Brass
N431810	1/2×3/8	SUS
N431910	1/2×1/2	SUS
N432010	1/2×3/4	SUS

N400210
SGS-W
Water gun SUS

N400310
SGS-R
High Temperature Water gun SUS

N400110
SGB-B
Water gun Brass

803926 WG-20
Water spray gun

Dimensions

854671 **HR-4A15**

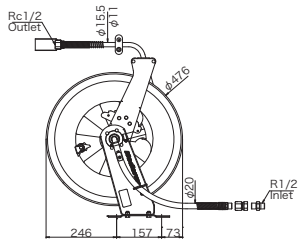

854859 **HR-3C15**

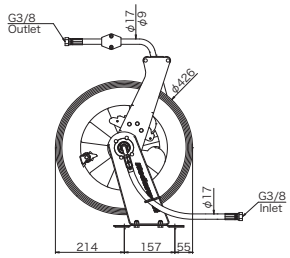

854855 **HR-4W15**

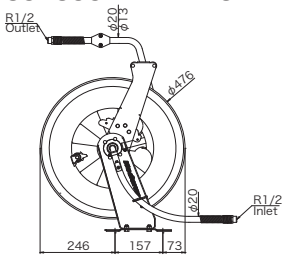

854858 **HR-3WH15**

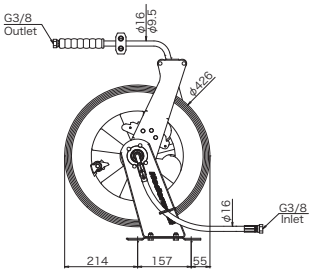

854857 **HR-3G10**

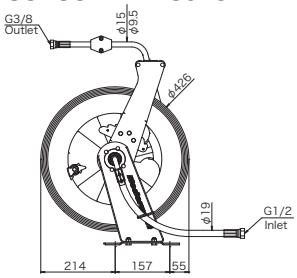

854856 **HR-4G15**

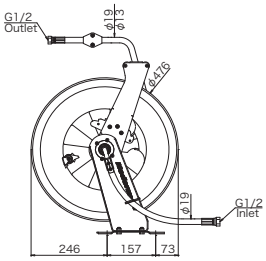

801428 **LBM-G,** 801237 **LBM-16**
802238 **LBM-30,** 801429 **LBM-60**

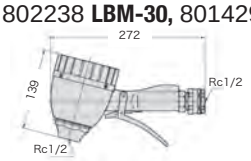

802765 **LBM-D**

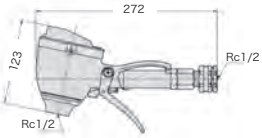

850139 **HDV-G**

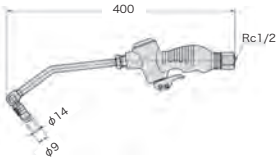

850138 **HDV-M**

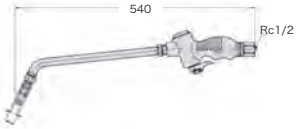

851136 **ODV-L**

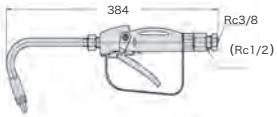

851137 **ODV-T**

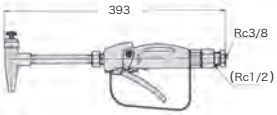

851138 **ODV-M**

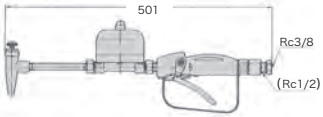

803926 **WG-20**

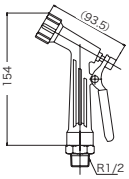

851985 **HPG-G**

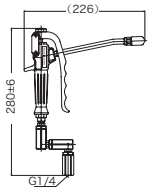

800440 **NDN-G**

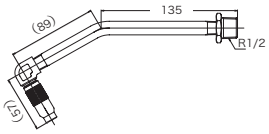

801195 **NDN-H**

801152 **NDN-P**

705387 **NOZ-P**

800441 **NDN-M**

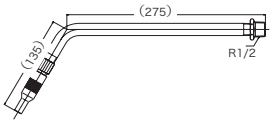

801204 **NDN-L**

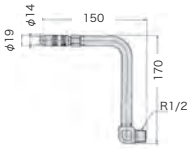

804570 **NDN-PS**

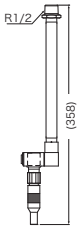

802865 **NDN-F**

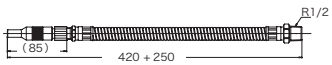

800730 **DN-T**

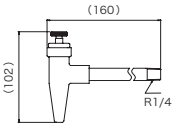

800680 **DN-L**

804569 **NDN-FS**

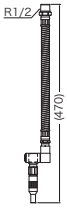

N400110 **SGB-B**

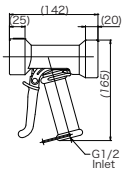

N400210 **SGS-W**

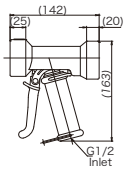

N400310 **SGS-R**

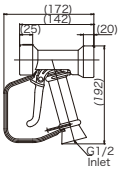

REQUEST SHEET

YAMADA CORPORATION
International Department
Phone:81-(0)3-3777-0241

FAX:81(0)3-3777-0584

For help and recommendations for pump choice and applications, please complete this form with as many details as possible.
Please send it by fax to Yamada Corporation and we will get straight back to you.

- Are you already using Yamada products ? (YES・NO)
- Have you dealt directly with Yamada Corporation in the past ? (YES・NO)
- How did you learn about Yamada Corporation.
  ( )

Purpose of this request.

- ☐ Request for technical information.
- ☐ Request for quotation.
- ☐ Request to purchase products.
- ☐ Request for more information.
- ☐ Request for catalogues of flyers.
- ☐ Request for local dealer contact details.
- ☐ Other.

Company

Address (with Postcode):

Phone: ( ) Fax: ( )

Department/Section/Group: Name

To: YAMADA CORPORATION, International Department

Please provide a sketch of your system including as many details as possible

1) Potential product: Model Diameter A

2) Objectives:

3) Specifications of fluid:

Name Fluid properties Concentration %

Specific gravity Viscosity cp Temperature ℃

Slurry included? ☐ Yes ／ ☐ No →Concentration Wt% Diameter mm

4) Pump output (Flow rate) Nominal rate /min /hr Max. rate /min /h

Total stroke M MPa

Ambient temperature

5) Fluid container: ☐ 200L Drum container ☐ 20L Pail container ☐ 18L square container

☐ Custom container: Specifications

6) Operation conditions: ☐ Outdoor／☐ Indoor

Operation frequency (How often do you run your pump?) Continuous / Intermittent hr/day or hr/week or hr/month

7) Air supply condition: MPa

8) Number of units: unit(s)

9) Expected commercial conditions

10) Other requirements

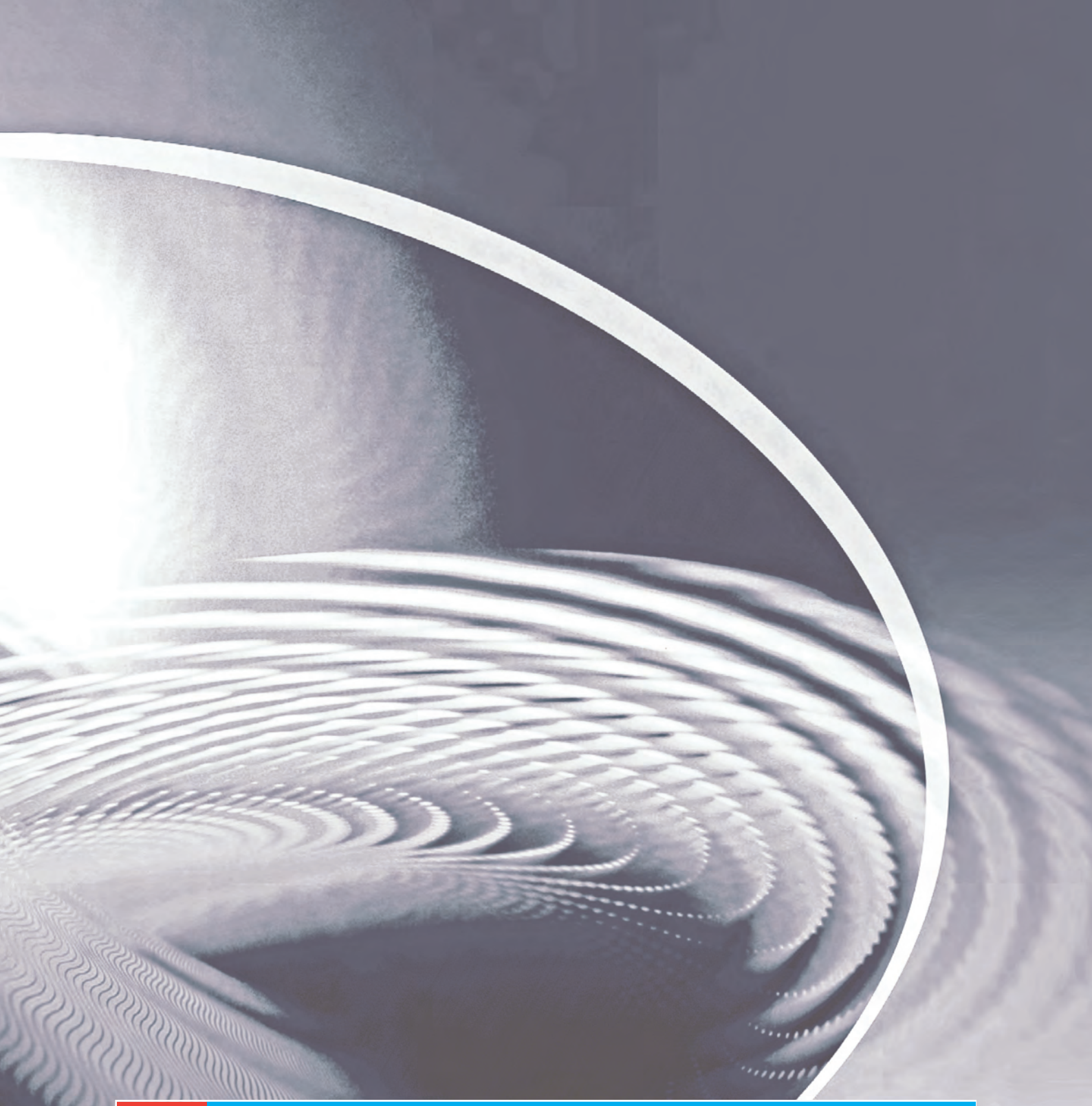

CAUTION WHEN SELECTING A PUMP

Yamada offers a large range of Lubrication Equipment to cater for many different kinds of materials and conditions. When selecting the most appropriate pump for a particular selection and installation please consult your local Yamada Pump Distributor or Yamada Corporation.

Your Local Distributor:

All product specifications and data are subject to change without notice.

Form no.:910-416E Revised: Nov.2015

YAMADA CORPORATION
International Department
No.1-3, 1-Chome, Minami-Magome,
Ohta-ku,Tokyo 143-8504, Japan

Phone +81-(0)3-3777-0241
Fax +81-(0)3-3777-0584

E-mail: intl@yamadacorp.co.jp
Web: www.yamadacorp.co.jp/global